INSTRUCTION MANUAL

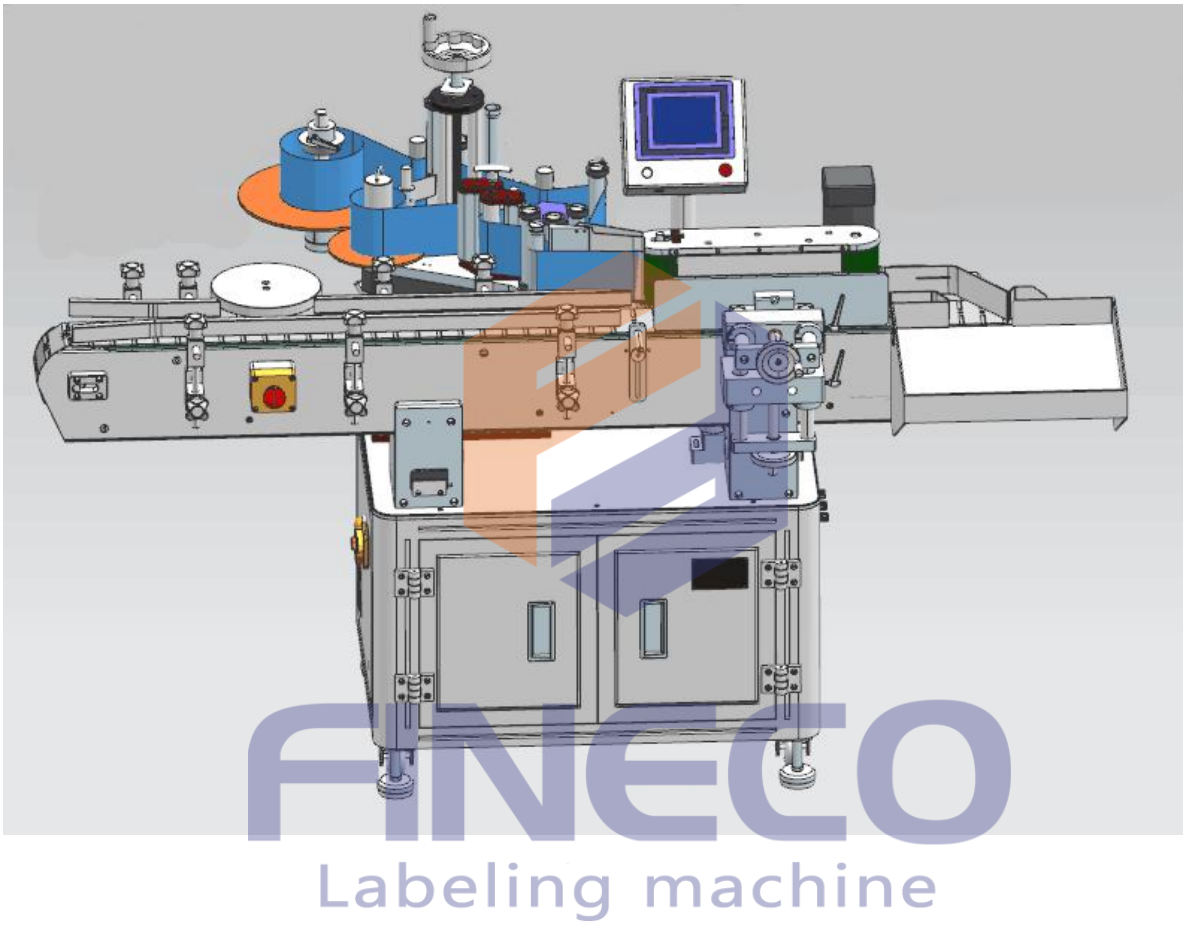

Model: FK803

Name ： Automatic Rotary Round Bottle Labeling Machine

Content

Chapter 1 Statement

1.1 Matters Need Attention

1. As this labeling machine is an industrial equipment, only trained workers are expected to operate it.

2.Operating this equipment need to be in accordance with the instructions in the manual or under our technicists' guidance. Notice that some mechanical parts described in this manual are used for instruction only, not included in the standard configurations.

3.This operation manual applies to FK803 ONLY and aims to ensure correct operation and adjustment. And we hold the final explanation right of this manual.

1.2 Rights Reserved

1.We will provide service of updating the mechanical parts, electrical parts and the software, but charge fees accordingly.

2.We will not responsible for any machine problem that caused by your arbitrarily movement, and you should not change the machine without our engineers' suggestion.

3.Optional function :hot stamp printer and other needed functions. We will provide technical support for you but hold no responsibility for the optional functions.

4.We hold intellectual property rights for this machine and machine instruction, we will look into legal responsibility if copyright or something like that

occurs.

1.3 Safety Considerations

1.Electric shock Caution！ Earth wire is indispensable for operating this machine, make sure you have one.

2.Caution！ Voltage overloaded is dangerous.

3.Caution！Do not touch the circuit in the electric box without our technician' guidance.

4.Caution！Do not touch the running mechanical parts.

1.4 Operation Cautions

Only trained worker are allowed to install, operate and maintain the equipment.

The operator should equipped with these qualities：

——be able to operate the machine safely by himself.

——be able to fix the small mistakes by himself.

——there should be at least 2 people at hand to provide guidance for him .

1.5 Operating Environment

Please do not use this machine in the following environment：

- great temperature variation
- high humidity
- strong vibration or impaction
- dusty
- where there is water, oil, chemical splashes

• Where there is a risk of explosive, flammable items

1.6 Run-in period

This machine are tailor-made according to your product and production line, being nonstandard equipment and the operator must be well-trained, so there would be a run-in period of 1 month or so. During the run-in period, you can ask us for technical support if the machine can not reach to your requirements.

Chapter 2 Introduction

2.1 Basic Use

Applies to the round bottle single labeling. Widely used in cosmetics, food, pharmaceuticals, disinfectant and other industries. Optional peripheral location detection means can be realized in the circumferential surface labeling the specified location.

2.2 Technical Parameters

＊labeling accuracy：±1mm (errors caused by product and label are not concerned)；

＊labeling speed:30～80pcs/min，depends on the length and material of the product)；

＊Applicable Product diameters: Φ25mm- Φ100mm

＊Applicable Label Size(mm)：length：20mm-314mm width（the backing paper）：15mm-130mm；

＊Device dimensions (mm) (L × W × H)：1950×1100×1300mm；

＊ Voltage (V)：220V/50HZ；

＊ Weight: about 185 kg.

2.3 Labeling Process Analysis

Feeding →Spacing→Detecting → Labeling→ Collection.

Chapter 3 Structure

3.1 Overview

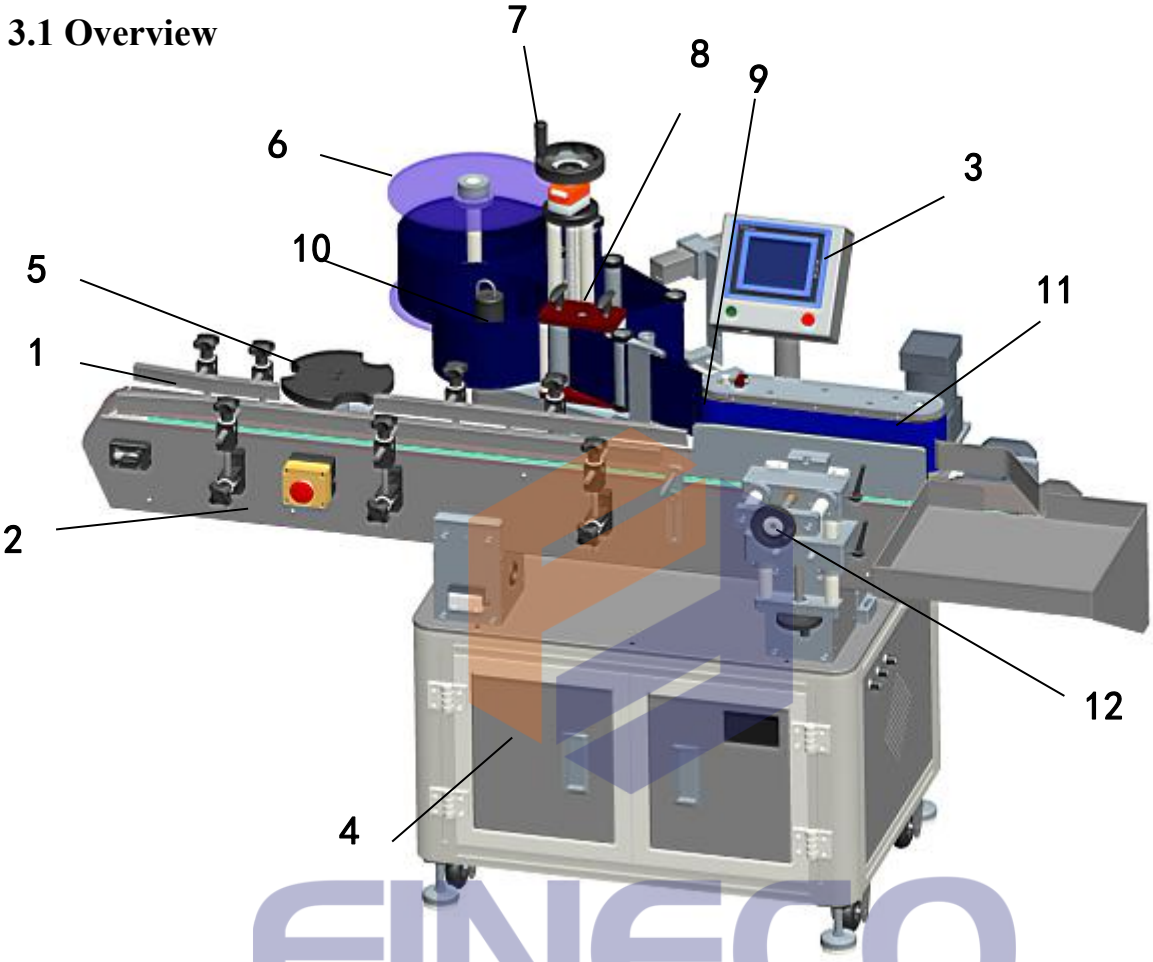

1.Guardrails：keep the bottles goes straightly, can be adjusted according to the diameters of the bottles.

2.Conveyor Belt：conveys the bottles until labeling completed.

3.Touch Screen(HMI):Setting labeling parameters here.

4.Electric Box：places the electronic configurations, such as PLC and motor drivers.

5.Spacing Wheel: separates the bottles one by one to keep certain distance

between every 2 bottles;

6.Label Tray：places label reel.

7.Vertical Adjuster:adjust the vertical height of the labeling head.

8.Traction Device：motivate the label reel.

9.Label-peeling Plate：peel the label from the backing paper.

10.Recycling device:recycles the back paper.

11.Wrap Around Device:drive the bottle to rotate while labeling .

12.Wrap Around Device Adjuster:adjust the around device to adapt to different diameters.

3.2 Detailed Picture

3.2.1 Product Sensor: consists of launcher/receiver and a reflector. it detects the position to be labeled and send signals to PLC, then the label would stick to the pointed position.

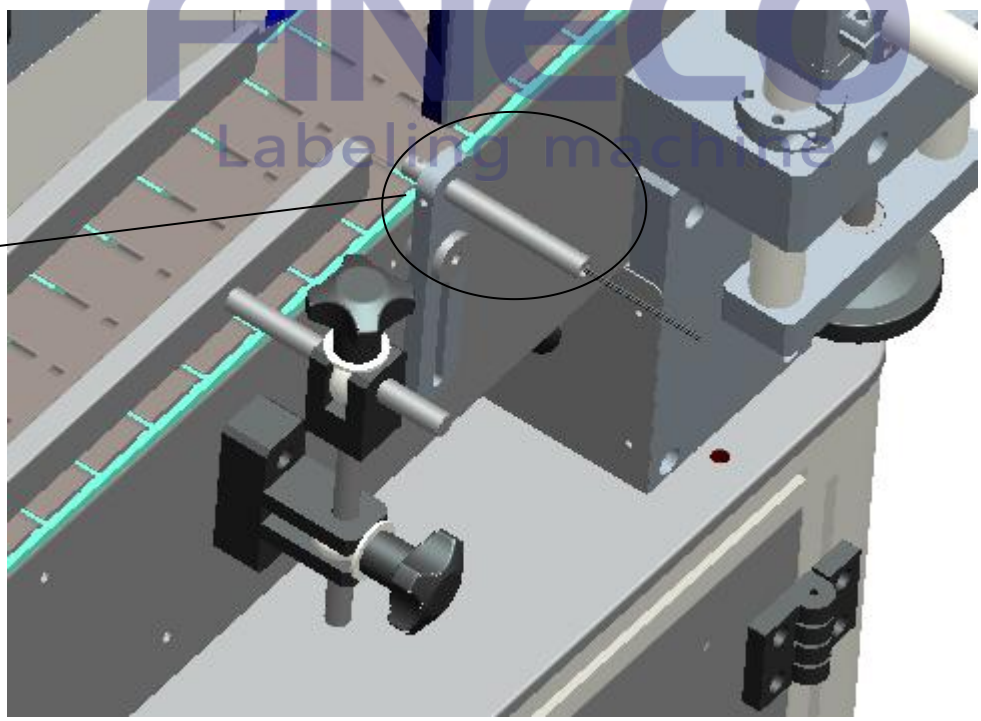

3.2.2 Label Sensor: U shaped，for label detecting.Can be moved to adjust the pre-peeled label length that stretches out from the label-peeling plate.

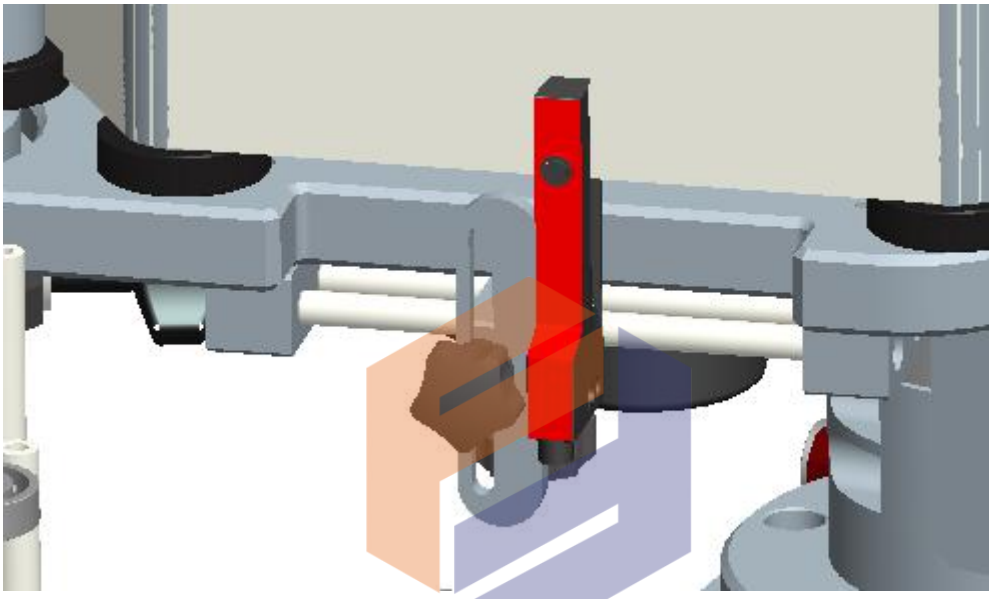

3.2.3 Labeling Head Adjusting Device:

Wheel 1:adjust the horizontal direction (left ⟷ right)of the labeling head.

Wheel 2:adjust the horizontal direction (forward ⟷ backward)of the labeling head.

Wheel 3:adjust the angle of the labeling head to make it adapt to tapered bottles.

Wheel 4:Adjust the labeling head in vertical direction (up⟷down).

If adjusting the 4 wheels can not help,try to loose the SCREW 4 to adjust the whole labeling head,remember to lock the screw 4 after adjustment done.

Screw 5：Loose screw 5 to adjust the whole labeling head.(Don’t forget to lock it after adjustment)

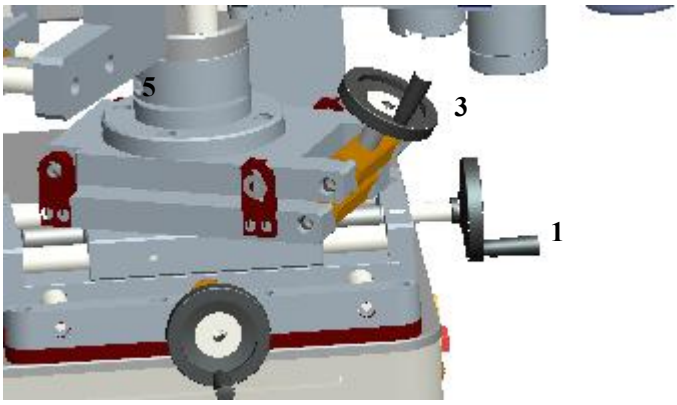

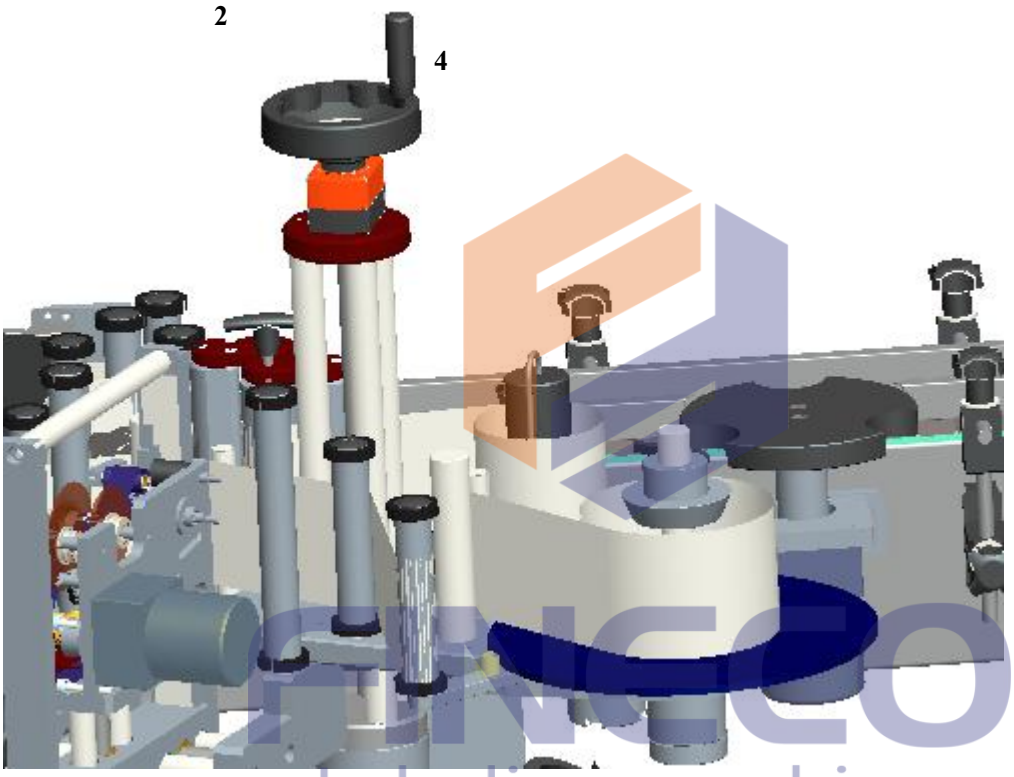

Chapter 4 Electric Configuration

4.1 The principle of electric control

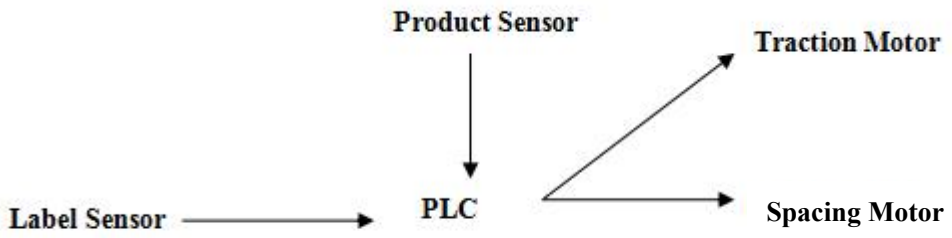

The label sensor ,product sensor send signals to PLC,where the signals are processed and sent to different parts such as motors,then labeling start.

4.2 The Touch Screen

4.2.1 Welcome Page:The basic information of the supplier.

4.2.2 Home Page:There are 4 sections:

Manual Operation,Production,Parameters Setting,Online Monitoring.

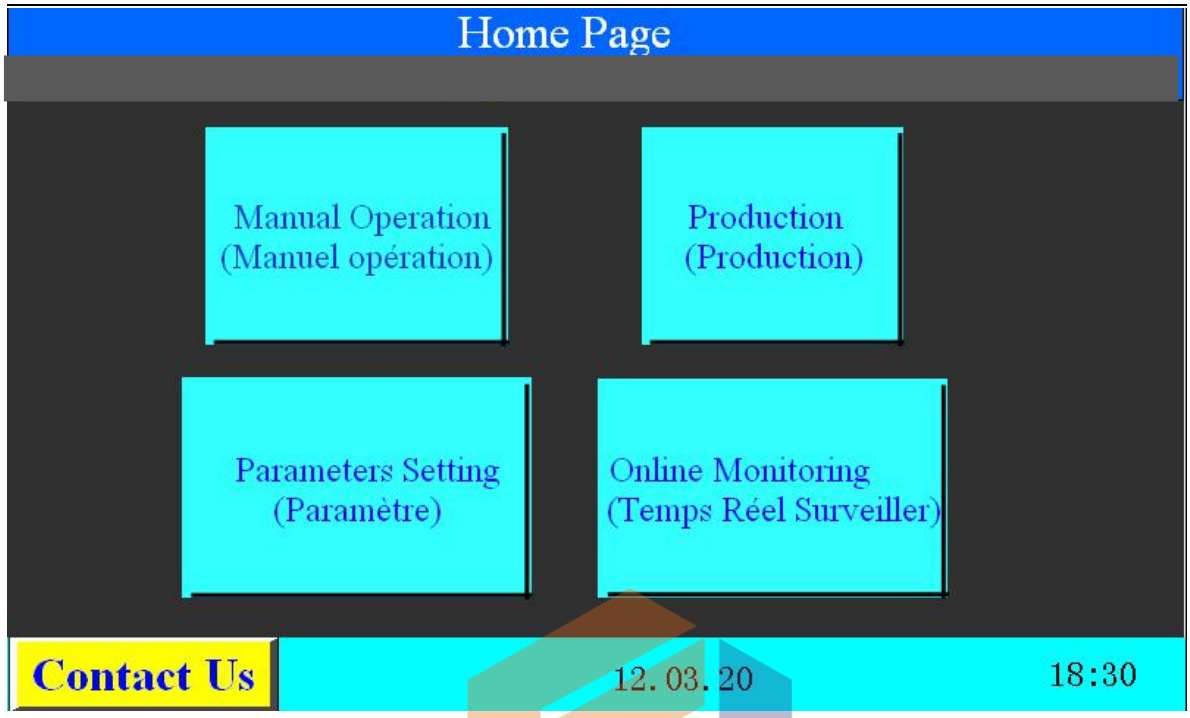

4.2.3 Manual Operation:used to adjust machine parts separately.

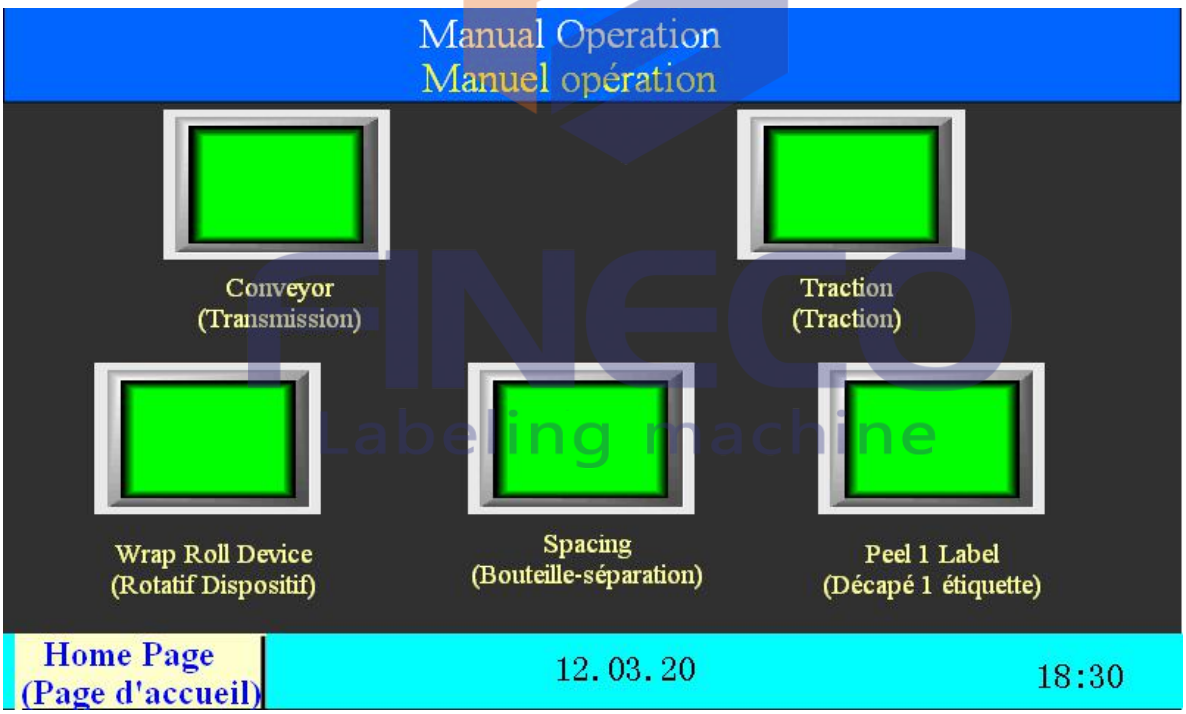

- Conveyor Transmission :Turn ON/OFF the conveyor motor,long press or click to operate the conveyor in Manual Mode;

-Traction Traction:Turn ON/OFF the traction motor,long press or click to peel labels in Manual Mode;

-Wrap Roll Device (Rotatif Dispositif):Turn ON/OFF the wrap around motor in Manual Mode;

-Spacing (Bouteille-séparation):Turn ON/OFF the spacing motor in Manual Mode;

-Peel 1 Label Décapé 1 étiquette:Click to peel one label at once;

4.2.4 Production Page：Operate labeling;Turn on/off functions separately.

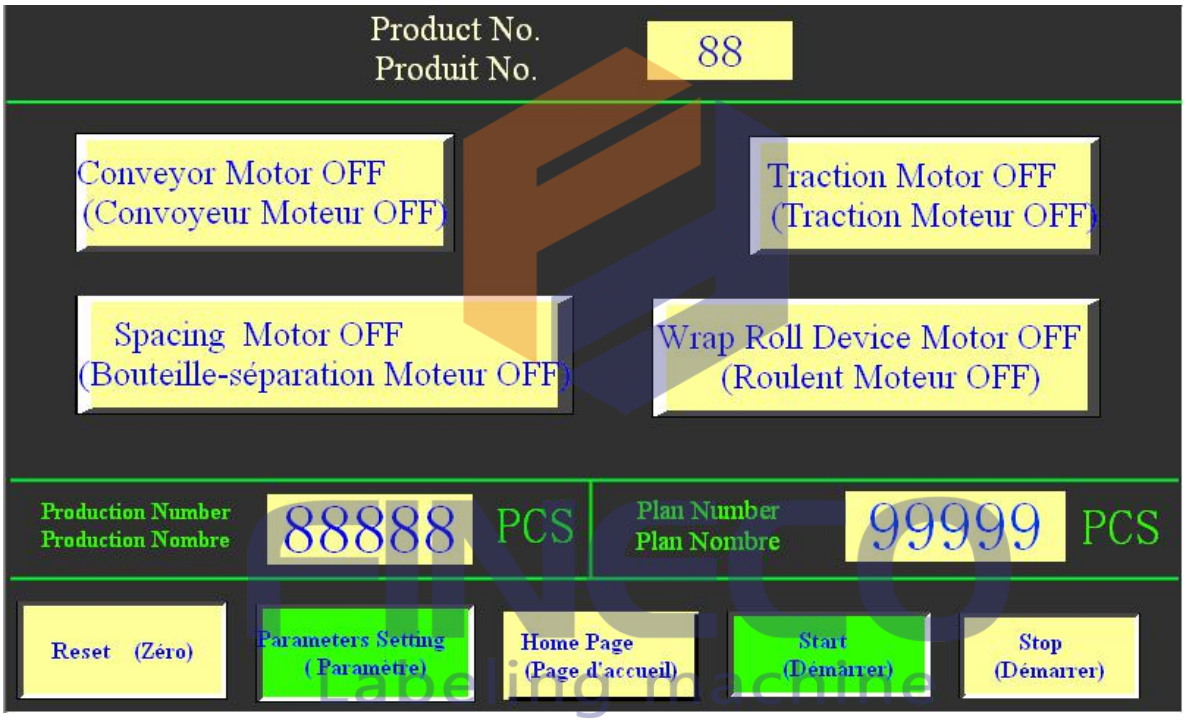

4.2.5 Parameters Setting：Setting parameters of each function.

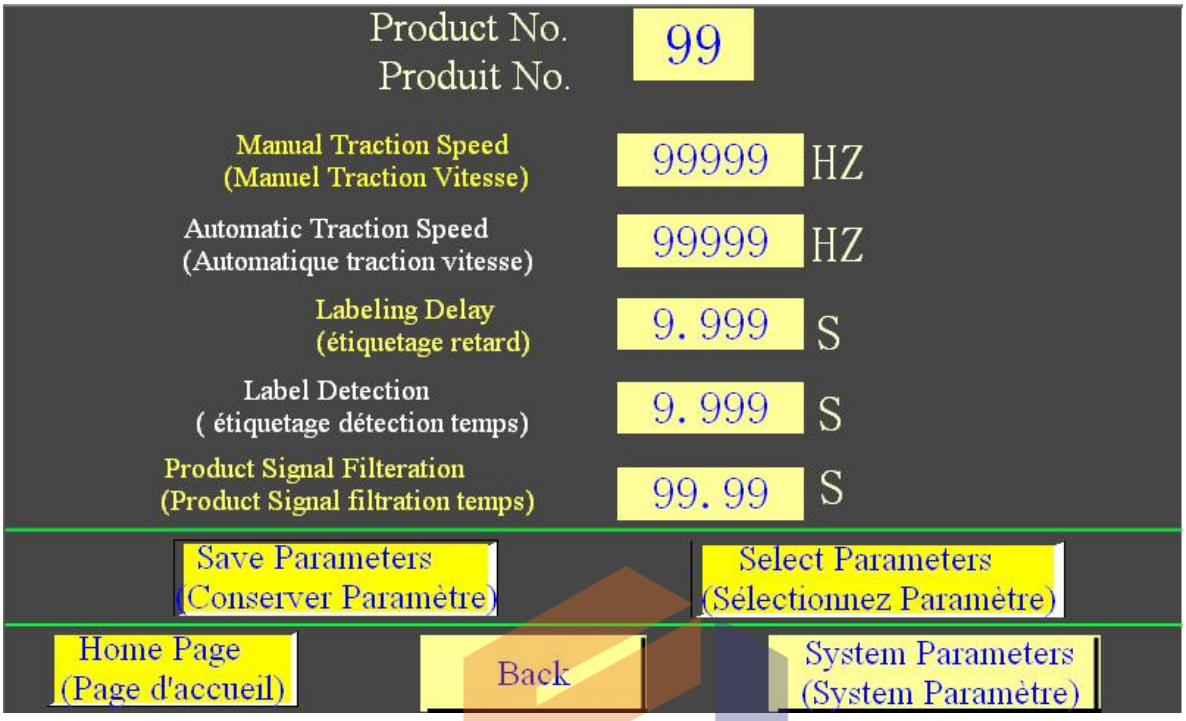

- **Manual Traction Speed / Manuel Traction Vitesse**:The speed of the traction motor under Manual Mode;
- **Automatic Traction Speed (Automatique traction vitesse)** :Adjust the speed of the label-peeling under Production Mode;
- **Labeling Delay / étiquetage retard**:Usually be “0”.With this parameter ,the labeling process will not start immediately after receiving the product sensor’s signal,but delayed.Can be used under the condition that either moving the product sensor nor using the position adjusters can not make the label be pasted to the designated position.
- **Label Detection (étiquetage détection temps)**:Used for long label,prolong the detection time under Production Mode;
- **Product Signal Filteration / Product Signal Filtration** :Sometimes products stay in the induction zone after labeling.In order to prevent labeling on the same product again ,we use this parameter to filter the product signal for a short time.

-Save parameters： save the parameters of the current product ,it can save 20 sets to the most.

-Select parameters:select parameters saved before.

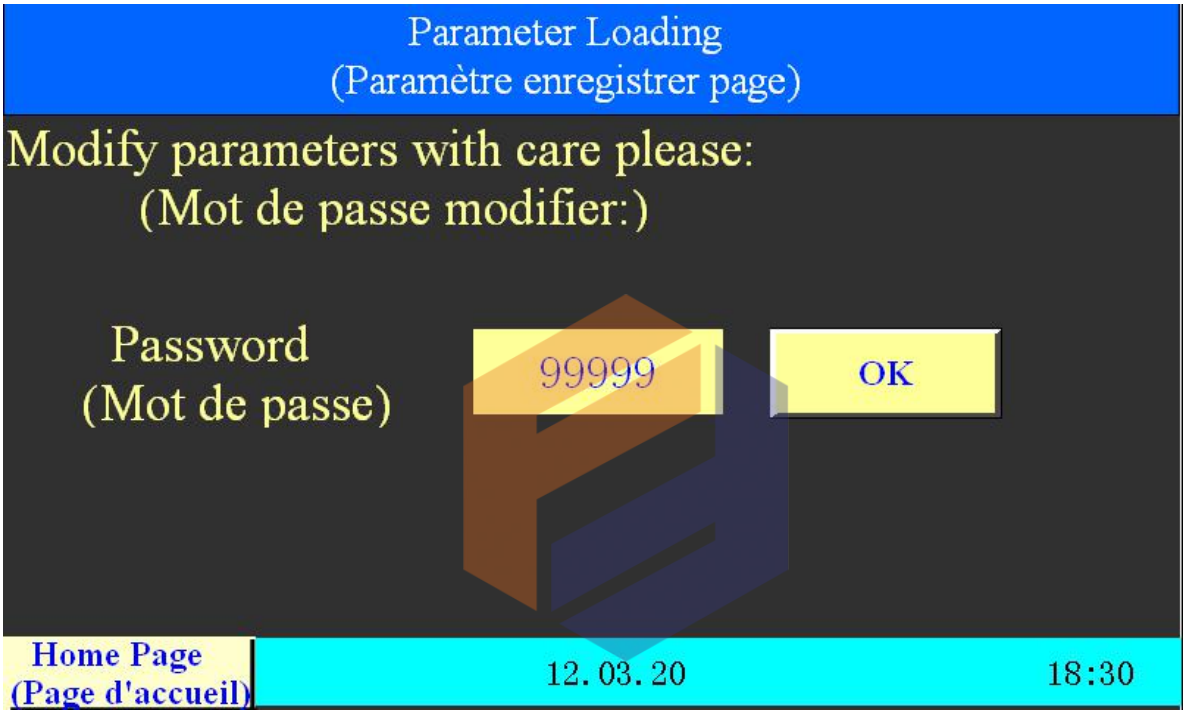

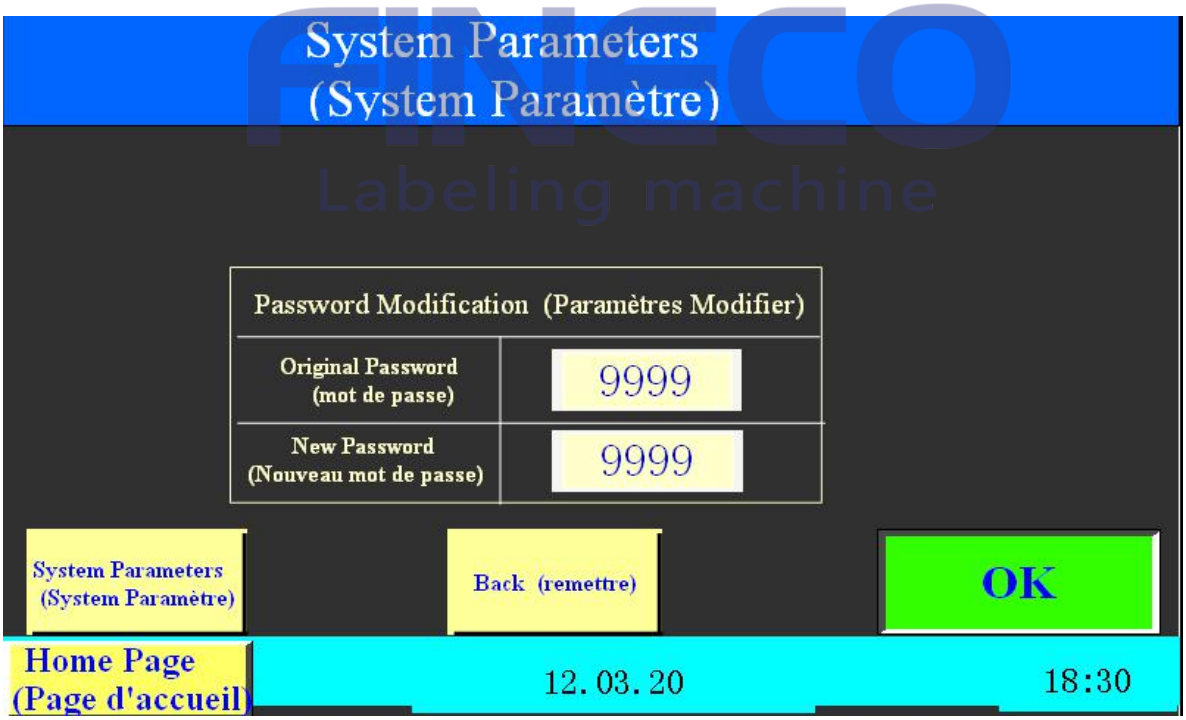

4.2.6 Online Monitoring:Monitor the work status of each part.

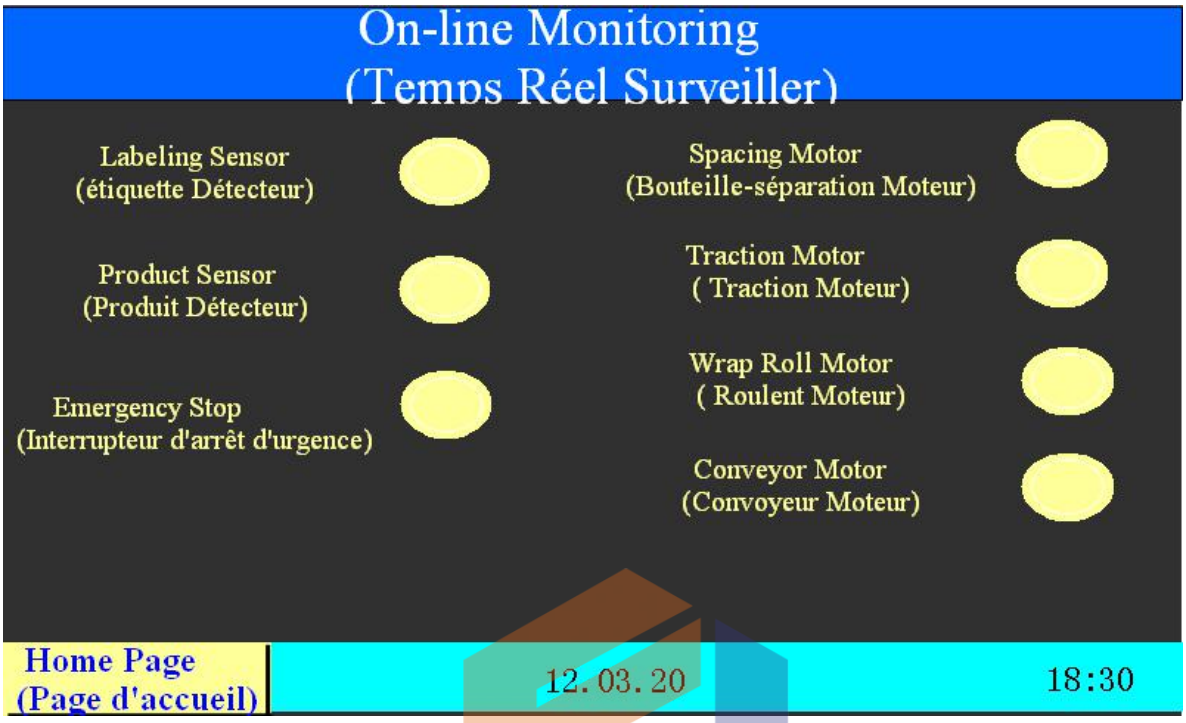

4.3 Buttons

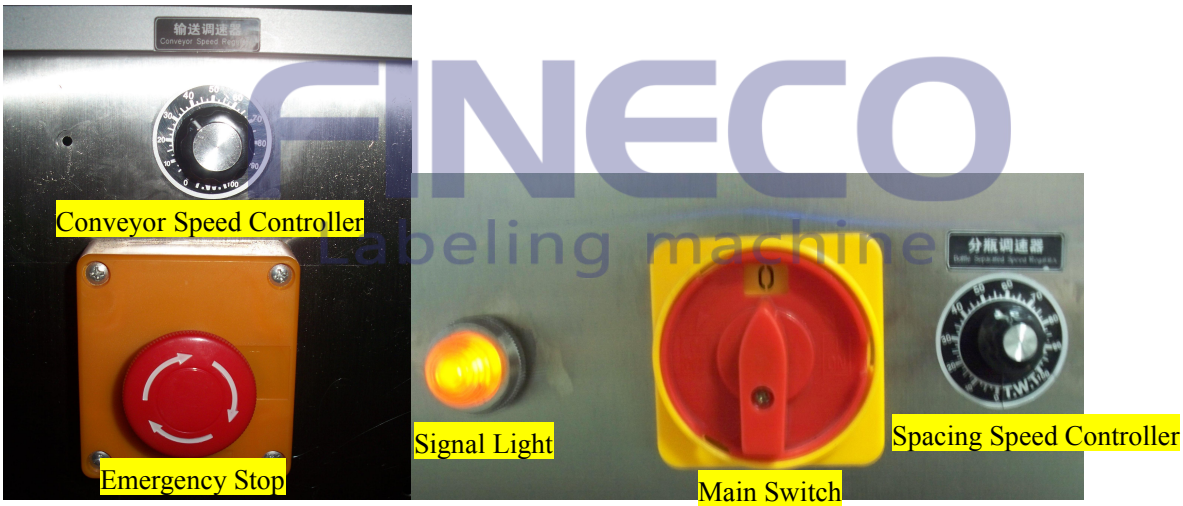

-Main switch:turn on/off the machine.

-Speed controller:there are 2 speed controllers,one for bottle separating and another for the conveyor belt.

-Signal light:indicating the working status of the machine .

Chapter 5 Adjustment

5.1 Mechanical Adjustment

1.Conveying adjustment:the standard is -the bottles can stand on their own steadily and straightly.adjust the height and distance of the rods on the 2 sides to adapt to different bottles.

2.Spacing device adjustment:adjust the distance of every 2 bottles to make sure every bottle's labeling time is enough,the standard is -the bottles won't fall down when separation.

3.Labeling head adjustment:loose the screws to adjust in horizontal,vertical directions,including angle adjustment.

4.Strengthening device adjustment:loose the screws in "4" to adjust perpendicularity of the strengthening rod; Loose the screw in "3" to adjust the vertical position of the rod.As picture 2 marked.

5.Label-peeling plate adjustment.loose the 2 screws on the plate to adjust the angle of it.

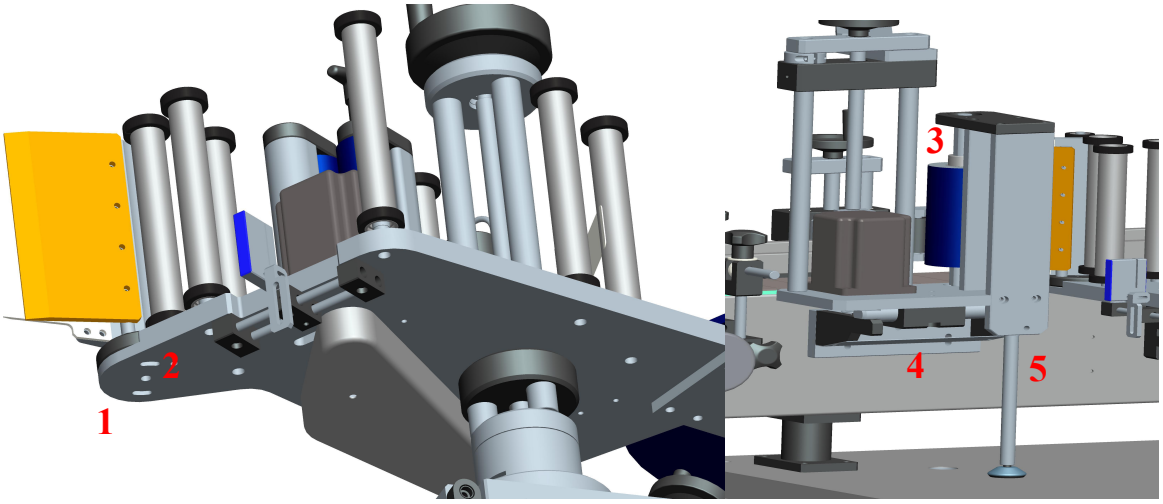

5.2 Label Sensor Adjustment

This machine is equipped with 2 sensors:product detect sensor and label sensor,you can adjust them according to your product and labeling requirement.

5.2.1 Position Adjustment

You can adjust them by adjusting the electric eye frame,we have talked about this in the mechanical configuration part.

5.2.2 The setting of the label sensor

The standard configuration of this machine is Leuze GS-63/Datasensor SR21.

(1) Label Sensor:（just for instruction use,not means the it being the sensor of your machine）

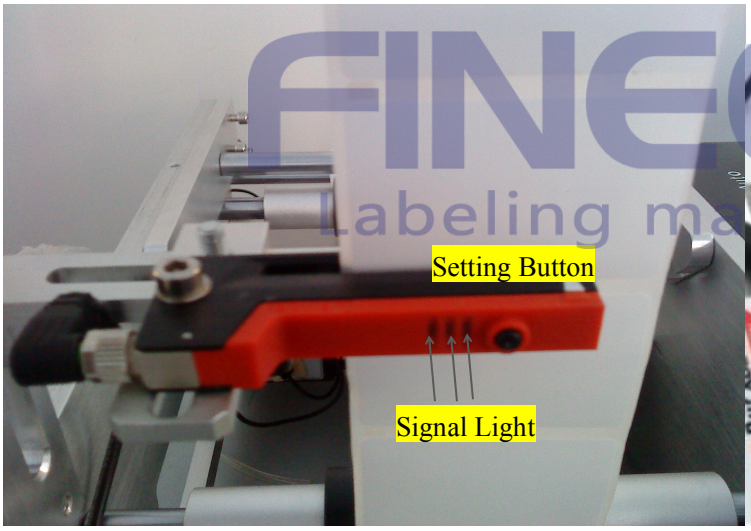

Work principle： light penetrability,the light penetrability of the label is different from the gap between two label,suitable for paper label or the label has certain thickness.

About the signal lights and the adjustment button:

Green signal light : power light;

Yellow signal light：status light（it lights up when output signal）;

Adjustment Button:used for setting the label sensor.

Setting Method:

Test :Make the label pass through the slot of the sensor and pull the backing paper,if the **yellow** signal light up when the label gaps pass and put out when labels pass,it means the label sensor works well and can be put into use directly.If not,you need to reset the label sensor:

① Put label in the focus of the slot, press the setting button for about 3 seconds until the yellow signal light flickers,then release the button.

② Move the label sensor to focus on the **gap** between two labels,press the setting button .

③ Pull the label,let labels and gaps go through the focus alternately.Check if the yellow signal light up and put out when the gaps and the labels alternately appear.

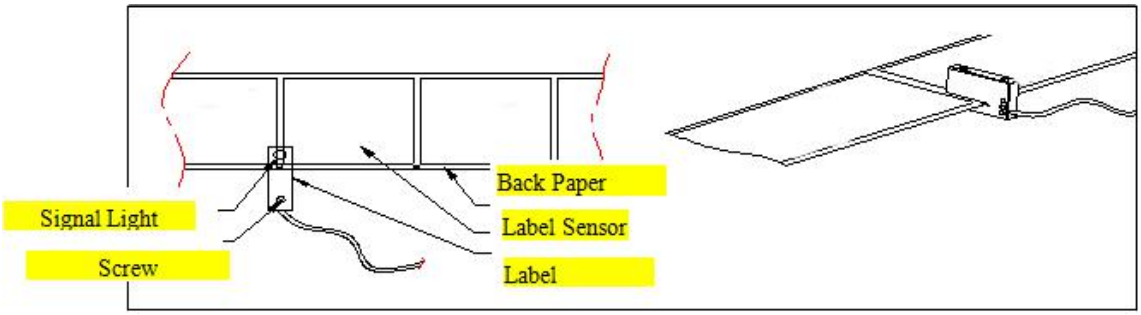

(2) Setting of Datasensor SR21

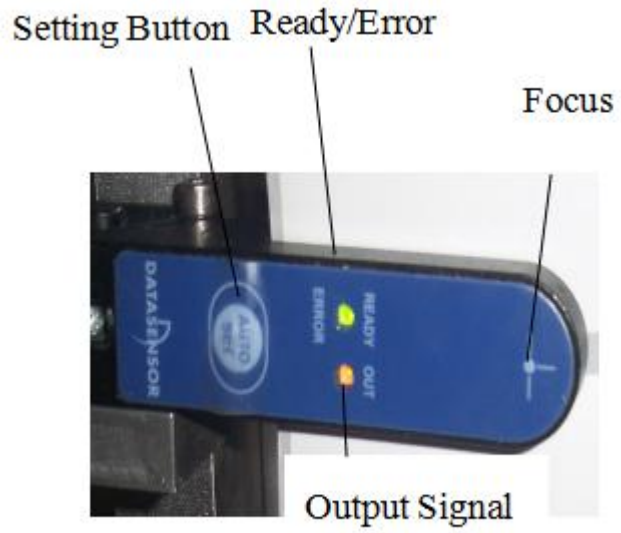

Datasensor SR21-IR(Italy)

(2) the Adjustment of Datasensor SR21-IR(Italy)

a. Work principle: Detect label by the intensity of light,suitable for the label that made of different material from the release paper.One side of the sensor launch light and the other side receives ,the intensity of the received light changes when the label and the label gaps alternately appears,by setting a threshold level, the sensor can detect if there is a label.

b. Setting Method:

① When the "ready"signal lights up,put the label on the focus of the sensor,pull the label to make the gaps and labels go through the focus alternately to see if the output signals change.If so,the sensor can be put into use directly.If not,pls set the sensor as following steps:

⑴ Make sure label reel goes through the sensor slot, 'focus' on label.Press the 'auto set' button, the Ready/Error and Output lights would put out, it means the sensor is capturing the signal of the label on its focus. Do not move the

label until the Ready/Error light flickers.

(2) When Ready/Error light flickers, draw the label to make the 'focus' on the gap between 2 labels..

(3) Press the 'AUTO SET' button again, Ready/Error light puts out. It means the sensor is capturing the gap signal. Do not move the label until the Ready/Error lights up.

(4) Pull the label back and forth to see if the 'out' signal lights up when 'focus' on the border of gap and label. Thus adjustment done.

(5)"Ready/Error" signal lights up shows that the sensor is working.

5.3 Product Sensor：(just for instruction use,not means the it being the sensor of your machine)

a. the connection method of FX-301series：please connect the product detect sensor as the picture.

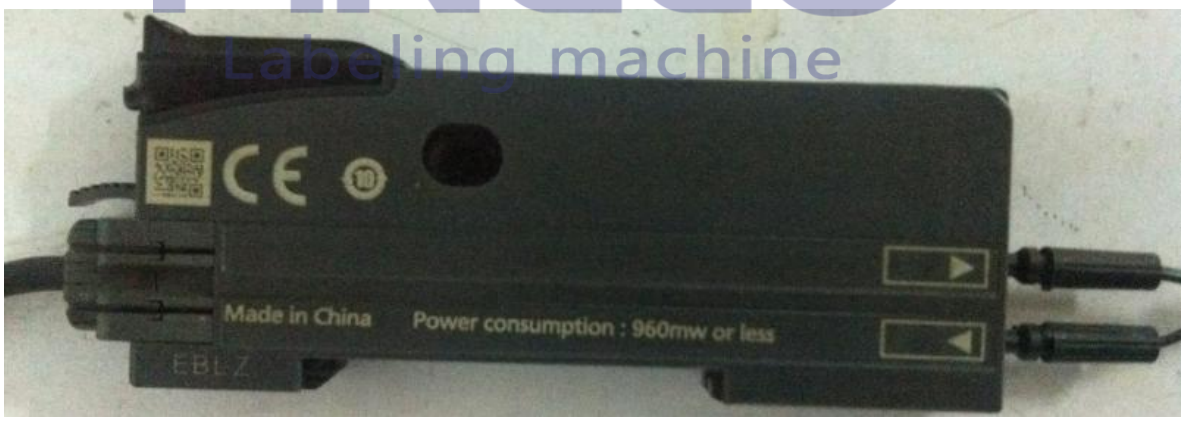

b. Work Principle：

The detect sensor identifying objects by light reflection.it launches light on the object and the object reflects light to the sensor.When the reflection light

reaches to your set number,the sensor can detect the object and send signal out.

c. Status Switching:

Press the“mode/cancel”button，the green signal changes among the “L/D”、“CUST”、“PRO”，representing different working status.

d Settings:

-Clear the induction zone,press the “+”button and adjust the green number to at least 2 times bigger than the red number.just as the following picture.

-Put a product in the induction zone(labeling position),make sure that the product stays close to the sensor frame on the left.You can adjust the labeling location of the product by adjusting the frame.

-Close the lid,setting finished.

-When the product be conveyed to the labeling position,the product detect sensor sends signals to PLC,then the PLC direct the relevant parts to operate,labeling start.

Chapter 6 Operation

6.1 Label Winding

Please winding the label as following:(key point:keep the intensity and balance of the label)

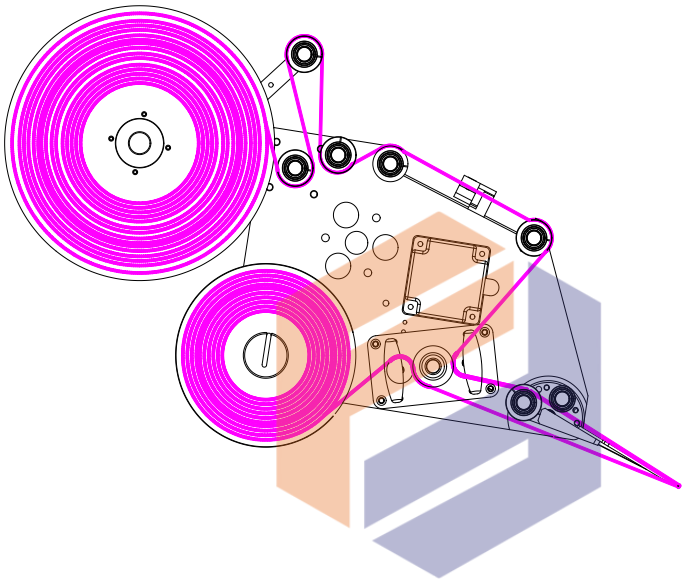

6.2 Mechanical Operation

Preparation :Turn on the power,choose the manual condition.

1.Conveyor Adjustment：Adjust the guardrails on the 2 sides to adapt to different bottles;

2 .Spacing Device Adjustment:Put bottle beside the spacing wheel,adjust the wheel to touch with the bottle ,but won't hinder it;

3 .Wrap Around Device Adjustment：Adjust this device by the adjusters to adapt to different bottles.

6.3 Electrical Operation

Plug in,turn on the main switch ⟶ Enter “Production” page click ⟶ “Start”to start labeling

Chapter 7 Product Maintenance

7.1 Maintain and Clean

7.1.1 This machine is powered by AC power,so it needs replace the fuse for overload protection .

7.1.2 Please use alcohol to clean the machine; and use commercial neutral cleaning fluid to clean the electric box.

7.1.3 Matters need attention：

Do not use cleaning tool that would damage the surface of the machine.

Do not use corrosive plastic utensils；

Do not use acid soluble liquid.

7.2 Routine Maintenance

Regular inspection is necessary ,especially the following parts:

1.The conveyor belt’s speed and accuracy (after extended periods of use)

2.Clean up waste paper scraps and pieces.

3.Remove oil residue from the rollers and the machine edges.

4.Clean the sensor lens with a soft brush or cloth.

7.3 Surface Maintenance

This machine is stainless steel built ,which is rust-proof.However, you still need to pay attention to rust in the placing processes,using anti-rust oil to spray the stainless steel and iron parts from time to time.

Chapter 8 Common Problem Solution

8.1 Release Paper Broken

Influence Factors:the quality of the backing paper;the friction in the traction process;label adhesion.

Step 1:Check the backing paper,if it is broken or of poor quality,then you should contact your label provider to change the backing paper.It is recommended to use glassine bottom paper.

Step 2:Check if there any part scratch the label in the traction process and remove them.

Step 3:Check if the label stick to each other,or it will be broken easily.Adjust the automatic high speed length to make sure the label would not attach to the labeled product.

8.2 Labeling deviation more than 2 mm

Influence Factors:Label deviation;the label-peeling plate is not parallel to the conveyor belt;the traction wheel skid;product error.

1.Label deviation: Loose the traction device,pull the label back and forth,correct the label trend automatically.Then fasten the limit circles on the two sides of the label.

2.The label-peeling plate is not parallel to the conveyor belt:Adjust the labeling head to make it be paralleled to the conveyor belt.

3.The traction wheel skid:tighten the locking screw of the traction wheel.

4.product error:errors happen in the product manufacture process also bring about labeling deviation,so the product quality must be strictly controlled.

8.3 Labels come out incessantly at a time

It relates to the sensibility of the label sensor,please adjust the sensor according to the steps we talked before.If the problem still exists,maybe the sensor is not applicable to the label or it has broken,please contact us in this condition.

Another cause may be the label bypasses the label sensor so the sensor can not detect the label,please make sure the label goes through the slot of the sensor.

8.4 The Release Paper is Loose at the Label-peeling Plate

There are two possible causes:the traction speed is too slow ,or the traction device loosed. Try to improve the traction speed or tighten the locking screw of the traction device.In addition,please check whether the drive belt behind the recycling axis is intact.

Service Commitment

Fineco based on the principle of customer first,dedicated to provide thorough pre-sales and after-sales service.

1.Professional technical consultation service

2.Professional training service.

3.Responsible for providing technical support.

4.One year warranty, provide maintenance services.

Thank you for using our machine， if there is any dissatisfaction with equipment quality, performance, service and so on, welcome to put forward valuable suggestions!